Reserved for spare I

Our company reserves the right to improve the products and manuals.If any change is made without notice, the appearance of the product shall prevail in kind.

This manual has been carefully checked, but it is not excluded that there may be misprints or misunderstandings on the content. Please understand that the company reserves the right to interpret.

♻ Improper waste disposal can cause environmental pollution

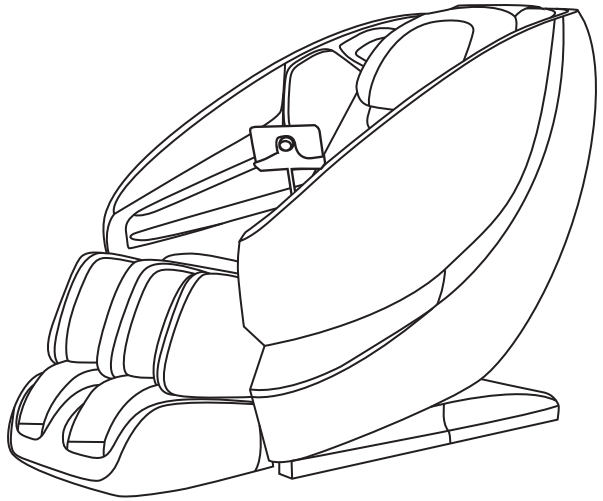

Deluxe Multi-function Massage Chair

Oasis

USER MANUAL

Please read all instructions before using.

Thank you for purchasing this product.Please read this user manual carefully before using to ensure proper installation and operation.

Please keep this USER MANUAL properly for future reference.

CONTENTS

SAFETY PRECAUTIONS ---- 1
NAME AND FUNCTION OF EACH COMPONENT ---- 4
External Structure ---- 4
Internal Structure ---- 4
Controller ---- 5
Controller Instructions ---- 5
VOICE FUNCTION ---- 9
Voice Control ---- 9
Voice Guide ---- 10
FUNCTIONS AND FEATURES ---- 11
PRELIMINARY CHECKS ---- 12
Unpacking Massage Chair Cartons ---- 12
Moving the Massage Chair ---- 13
Connecting to Power ---- 13
Position & Placement for Installation ---- 14
Floor Protection ---- 15
Commissioning ---- 16
Before Sitting in the Chair ---- 16
Legs Extension ---- 17
Audio Function ---- 17
After Use ---- 17
PRODUCT CARE AND STORAGE ---- 18
TROUBLESHOOTING ---- 19
TECHNICAL SPECIFICATIONS ---- 19

TROUBLESHOOTING

No.	Symptoms	Possible Causes	Possible Solutions
1	Tapping or humming sound is heard	This sound is normal and comes from the motor or massager rubbing against the cloth cover Sound and comes from the massage rollers or other mechanical parts rubbing against the cloth cover	No need to take any measures
2	Appliance does not start	The power cord is not secured into the socket.	Secure it into a well-functioning electrical outlet
		The power switch is off.	Turn on the switch
		The fuse is blown.	Replace only with a fuse ofsame type and rating
3	Backrest or footrest can not raise or recline	Excessive load has been pressed on the backrest or legrest	Reduce the load and try again
4	Airbag malfunctions	The air hose is blocked	Straighten the air hose and clear out the blockage
5	No music comes from the speaker	The volume is turned to the lowest	Adjust the speaker volume from the mobile devices
6	Massager stops working while in use	Massage chair is experiencing too much pressure	Slightly lift your back/ backrest

If problem remains, please contact us or authorized service center for maintenance.
Important: Do not attempt to repair this product yourself, our company shall not be liable for the injury or damage caused by any servicing without authorization.

TECHNICAL SPECIFICATIONS

Product Name: Massage Chair
Product Model: Oasis
Rated Voltage: 110-120V~
Rated Frequency: 60Hz
Rated current : 1.6A

SAFETY PRECAUTIONS

Important Safety Precautions

- Before using, please read the SAFETY PRECAUTIONS carefully to ensure correct operation of this appliance.
- Precautions and warnings listed below will help to ensure proper operation of this appliance. the classes of accidents caused by incorrect use are classified into WARNING and CAUTION.
- Read all WARNINGS and CAUTIONS below and follow all instructions within this manual.

WARNING	Improper operation may cause injury to users.
CAUTION	Improper operation may cause injury to users or damage to product.

	Prohibited		NO Disassemble

Not suitable for below persons

We recommend that those with any of the following conditions should consult your physician before using.

WARNING

- Individuals with severe heart disease and hypertension.
- Individuals with osteoporosis, bone tuberculosis, or incomplete healing after fractures.
- Individuals with bone tumors.
- Individuals with ulcers, wounds, or other skin injuries.
- Individuals with low body weight.
- Individuals with pacemaker or electronic devices implanted in the body.
- Pregnant women, individuals who are menstruating, or those with a fever above 38 degrees Celsius.
- Children and individuals with cognitive impairments should be supervised by a responsible adult to ensure their safety.
- This product is equipped with heat function, persons with reduced sensory of heat should pay attention to it.
- Those undergoing treatment, especially those who are not feeling well.

Control Panel Precautions

CAUTION

- Do not operate the controller with wet hands or pull the controller wire by force.
- Do not spill water or other liquid into the controller to avoid fault.
- Do not lay heavy items on the controller.

Cautions Regarding the Power Connectors and Power Cord

CAUTION

- Verify that the power voltage stated on the rating label corresponds to your local electricity supply.
- Do not use a wet hand to unplug the power cord to avoid electric shock.
- Do not drag the cord, reach to the front plastic end to unplug it.
- Do not squeeze the power cord by the appliance or other heavy objects.
- Do not damage, over bend, pull hard or twist the power cord.
- If the supply cord is damaged, it must be replaced by the manufacturer or its service agent or a similarly qualified person in order to avoid a hazard.

PRODUCT CARE AND STORAGE

Care Instructions

- To treat stains on the back panel, armrest, footrest, plastic parts or air hose, spot clean with mild detergent foam, then wipe it with a dry cleaning cloth.
- To treat stains on the controller, power box, spot clean with a dry cleaning cloth.
- To treat stains on the back cushion or pillows, use a water-based upholstery cleaner only, wipe it with moist cloth, then air dry.

WARNING

- Pull out the power cord from the power strips before care and maintenance.To avoid electrical shock or injury, do not touch the power cord with wet hands.Make sure no detergent enters into the power box while cleaning.
- Do not use benzene, thinner or other solvents on your product, it may cause fading or damage to the product.
- Do not iron the upholstery.

Storage Methods

- Cover the product with a dust-free cloth to prevent the collection of dust if not in use of a long period of time.

CAUTION

- Do not leave this product exposed to direct sunlight for long periods of time. This may cause fading or damage.

Warm Tips

During daily use, please check for the following symptoms:

- Burnt smell.
- Power flickers on and off when touching the charging cable.
- The power cord is hot.
- Other abnormal symptoms.

CAUTION

- Please stop using the product to avoid breakdowns or accidents if any above symptom exists.
- Switch off the power button and disconnect the plug, contact us or the dealer for repair.
- All other servicing except above care and maintenance should be serviced by an authorized dealer or service center.

WARNING

Pull out the power cord from the power strips before care and maintenance.
To avoid electrical shock or injury, do not touch the power cord with wet hands.
Do not try to dismantle or repair the product yourself, please send your massage chair to the authorized service center.

PRELIMINARY CHECKS

Legs Extension

▶ Step your feet on it to extend the legrest to the length you desire for better massage experience.

Legrest Extended

Legrest Retracted

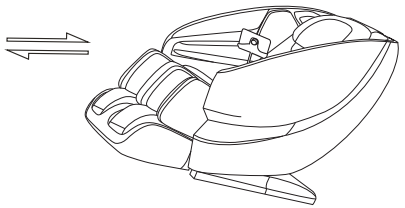

▶ You may adjust the legrest to the length you desire for better massage experience.

WARNING

- ▶ Do not play on the massage chair or operate it improperly.
- ▶ Ensure there is no obstruction when raising or reclining the backrest and legrest.
- ▶ Do not put foot, fingers or any other objects in the openings of the chair when it is in the reclining, raising or restoring motion.
- ▶ Ensure that massage chair is restored back to its original position before getting off the massage chair.

Audio Function

▶ To play sound, turn on Bluetooth on your Android/Apple iOS device and place the massage chair in discovery mode to pair(Name: Oasis)

After Use

- ▶ Always unplug the massage chair from the electrical outlet immediately after use.
- ▶ Turn off the power switch and unplug the massage chair from the electrical outlet while not in use to avoid children power on the massage chair accidentally.
- ▶ When not in use for a long period of time, we recommend that the chair be covered, the power cord be coiled and that the unit be placed in an environment free of dust and moisture.

SAFETY PRECAUTIONS

Best Circumstances

CAUTION

- ◆ Do not use this appliance where temperature is over 40℃.
- ◆ Do not use this appliance in moist or dusty environment.
- ◆ Do not use this product and unplug from outlet during thunder or lightning storms.
- ◆ Do not use outdoors.
- ◆ Please place the product on the flat level floor.
- ◆ Do not store near heat or open flame.

Best Practices for Safe Use

CAUTION

- ◆ Only for users weigh below 120kg.
- ◆ Do not use other therapeutic device together with this product.
- ◆ Do not use the product for therapeutic treatment purpose.
- ◆ Appliance should only be used by one person, do not use by two or more persons at the same time to avoid damage to the products.
- ◆ Do not use the product right after meal, it may cause discomfort.
- ◆ Remove the accessories from the arms and empty the pockets while using the massage services.
- ◆ Check the upholstery under the cushions and other spots, if any damages are present, do not use it and refer to a qualified service professional for servicing.
- ◆ If you feel any abnormal discomfort during the operation of this product, stop use immediately.
- ◆ Use the appliance for 20 minutes each time is highly recommended.
- ◆ Make sure there is no obstacles behind the chair and there is enough clearance before adjusting the backrest or footrest angle
- ◆ Make sure no other excessive load pressed on the backrest or footrest, keep children, pets or any other barrier away from the unit reclining backrest/ extending footrest to prevent any accidental injury.
- ◆ Please be seated properly while using the product to avoid injury.
- ◆ Do not drag or push the chair or roll on its casters on wood floor or carpet to avoid damage.

PROHIBITED

- ◆ Never operate this product if it has damaged/exposed part or power leakage.
- ◆ Do not stand on or stack heavy objects on the legrest.
- ◆ Children should be supervised to ensure that they do not play with the massage chair.
- ◆ Do not fall into sleep while the product is operating.
- ◆ Avoid using the product under the influence of alcohol.
- ◆ Do not put fingers or foreign objects in the openings of the appliance to avoid injury to the user or damage to the appliance.
- ◆ If there is any smoke or unusual smell during operation, stop using immediately.

NO DISASSEMBLE

- ◆ Do not disassemble this product to avoid failure.
- ◆ Do not attempt to repair or dismantle the appliance without permission.Please contact us or authorized service agent.

UNPLUG POWER CORD

- ◆ Pull out the power cord from the power strips before maintenance.Never plug in or pull out power cord with wet hand to avoid shock or injury.
- ◆ Pull out the power cord from the power strips after use.
- ◆ Unplug from outlet when the power supply is cut.

SAFETY PRECAUTIONS

Best Practices for Safe Use

CAUTION

- Do not cover the product with blankets to avoid accidents due to overheat.
- The plug should match with the socket outlet. Do not use a power strip to avoid electric shock, short circuit or fire.
- Do not use this product in areas of high concentrations of volatile compounds to avoid fire or damage to the product.
- Do not use solvents rubbing alcohol to clean your product; Do not spray insecticides into the product.
- Individuals with paralysis should not use this product, as it may cause discomfort or injury.
- Do not coil the power cable to avoid damaging, fire or short-circuit.
- Users should not be naked while using the massage chair.
- Do not sit on the legrest or armrest to avoid accident.
- Do not use this product near heat, open flame or on heating floor.
- No smoking in the massage chair to avoid fire.
- Do not use the massage chair while your skin or clothing is wet to avoid electric shock.
- It is recommended to avoid prolonged use of the product on the same part of the body. Taking a 30-minute break between sessions is recommended to prevent potential discomfort or injury.

- Never operate this product if water or any foreign object enter into the product, or there is damage to the product.
- Check the power switch before use to avoid accident.

PRELIMINARY CHECKS

Commissioning

- Use the controller to recline the backrest to its lowest position, raise and extend the footrest to its top position, make sure there is enough clearance before commissioning.
- Return the backrest and footrest back to its default position after commissioning and turn off the power switch（To choose the massage program, please check the Controller Instructions and Instructions of Display Screen for reference)

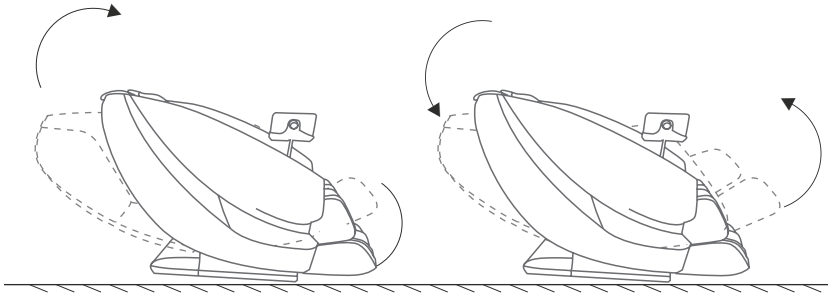

Before Sitting in the Chair

- Ensure the legrest is well assembled before sitting on the massage chair.
- Ensure the massage chair is returned to its original position before sitting on it. If there is any part not in default position, please turn on the massage chair to allow it to restore.

CAUTION

- Do not take seat while the legrest is lifted.
- Do not put excessive load on the legrest to avoid damage.

PRELIMINARY CHECKS

Floor Protection

- Before use, we recommend placing a piece of carpet or soft mat underneath it to avoid damaging the floor.

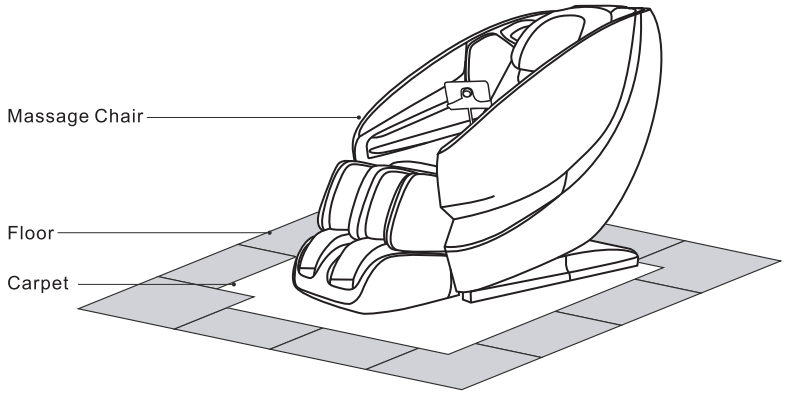

Surrounding Environment

Do not use the massage chair in high moisture environment such as near swimming pool or bathroom to prevent electric shock accident.

Please keep the massage chair away from heated surfaces to prevent fire hazard or damage to the product.

Grounding

This product must be grounded, the plug must be plugged into an appropriate 3-wire grounded outlet that is properly installed and grounded in accordance with all local codes and ordinances to reduce risk of electrical shock.

NAME AND FUNCTION OF EACH COMPONENT

External Structure

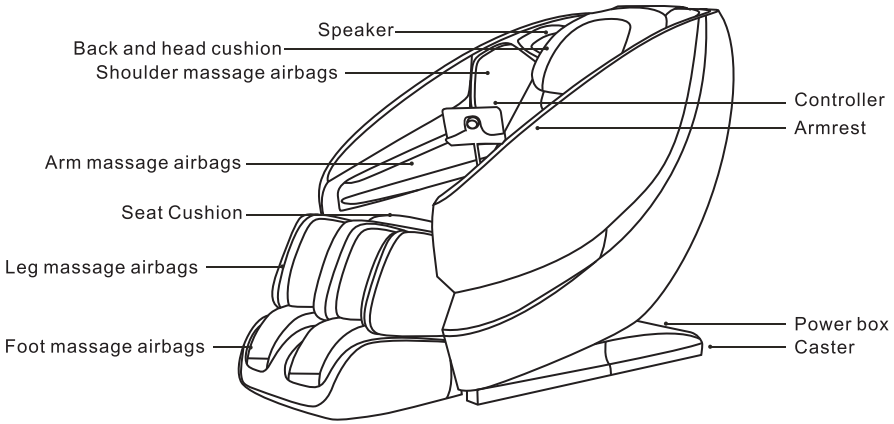

Internal Structure

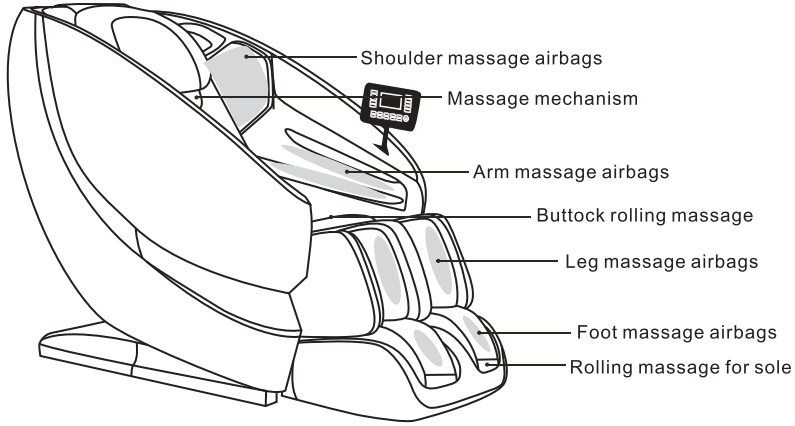

NAME AND FUNCTION OF EACH COMPONENT

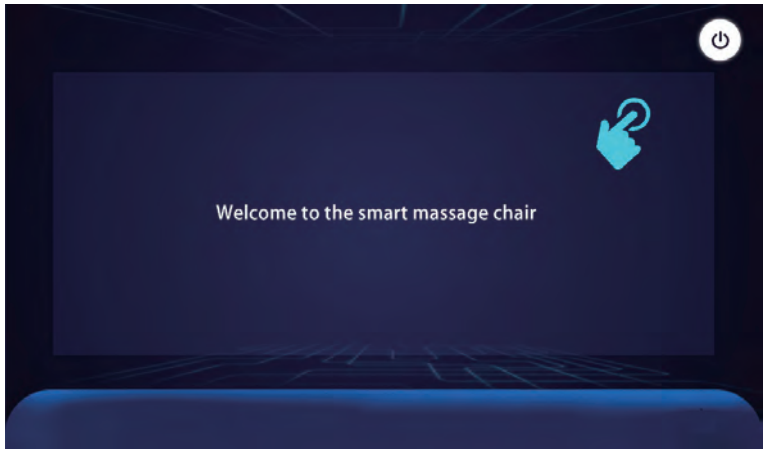

Please press' ' Press the button to activate the massage chair



After booting up, enter the massage status interface for 15s. During the 15s, press "Mech Up" and "Mech Down" to adjust the massage mechanism to correct neck position.

PRELIMINARY CHECKS

Position & Placement for Installation

- Clearance space for the massage chair:
  Ensure there is an adequate clearance for the installation: It needs 16cm clearance for the reclining of the backrest; It needs 30cm clearance space for the extension of footrest and sliding forward of the chair.
- Keep it 1 meter away from the TV, radio or other audio/video appliance to avoid signal interference.

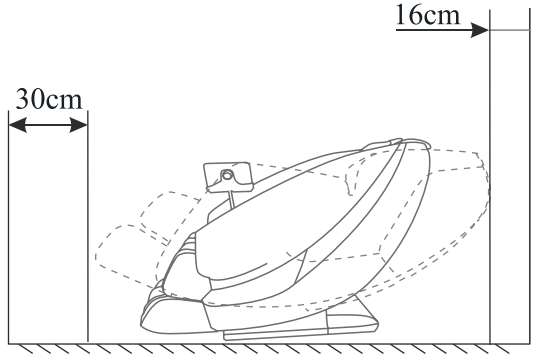

- Keep the distance between the power socket and power switch within 1.5 meter.

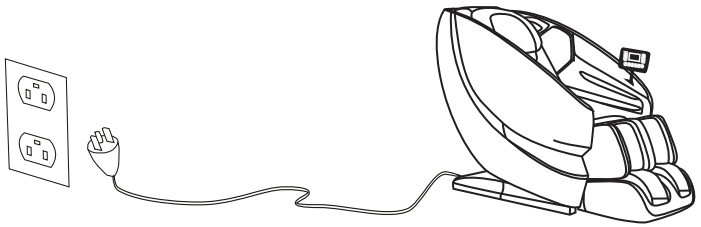

CAUTION

- Keep the distance between the power socket and power switch within 1.5 meter to avoid damage of power cord while massage chair sliding forward.
- Straighten the power cord while in use to avoid tangle or damage.
- When the massage chair sliding forwards or back, please check to make sure there are no children, pets or other obstacles around to avoid accident.

PRELIMINARY CHECKS

Moving the Massage Chair

- Roll the chair on its casters to the desired location.
- Incline the backrest to upright position.
- Turn off the power switch and unplug the appliance from the electrical outlet.
- Push down on the backrest and lift up on the front side by grabbing the moving Holder located to the front bottom of the armrest, roll the chair on its casters to the desired location (check the sketch for reference).

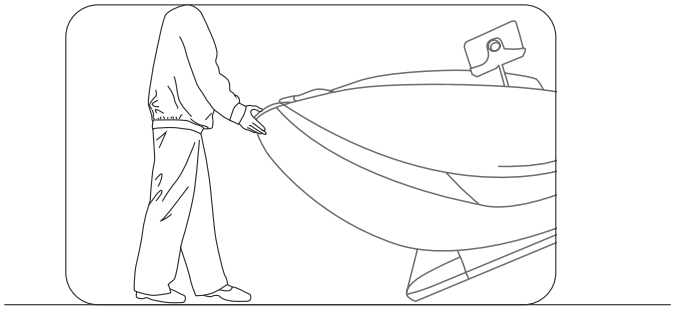

CAUTION

- Do not move the chair when there is a user inside.
- To carry this product, do not lift by the legrest or armrest, hold the chassis and steady the backrest (have 4 or more people to carry the product).
- The massage chair is heavy, please be careful when moving it.
- Please contact the distributor if you need help.
- Please make sure there is enough room for moving the massage chair.

Connecting to Power

- Connect this appliance to a 3-wire properly grounded outlet.
- Turn on the power switch located at the back of power box.

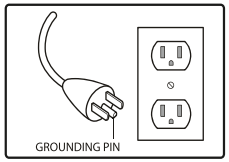

CAUTION

- Please verify that there is no damage to the supply cord before switching on the massage chair.
- Please verify that the main power switch is turned off before connecting to power.

NAME AND FUNCTION OF EACH COMPONENT

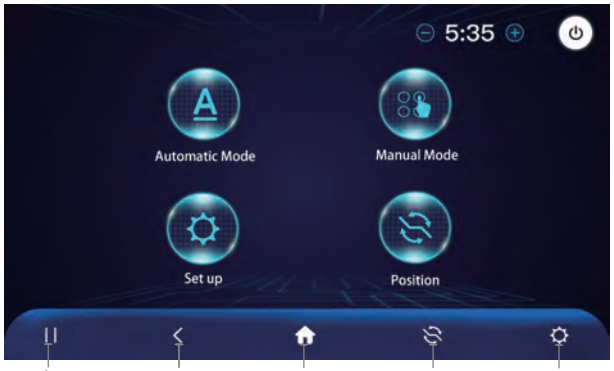

1.Pause2. Back 3.Home4. Positipn5. Settings

After neck position adjustment, enter the main interface and select any function you want.

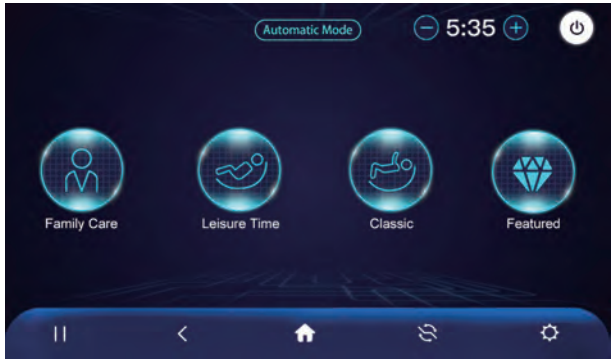

Four sets of automatic programs
1.Family care
2.Leisure Time
3.Classic
4.Featured

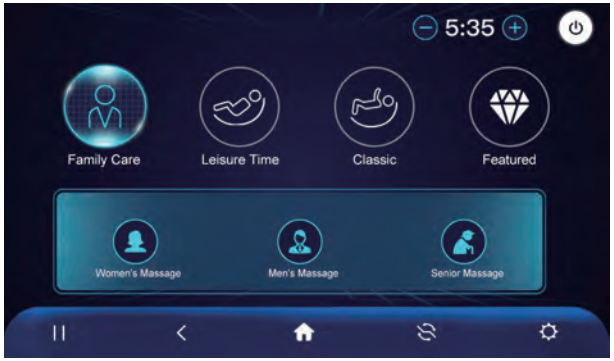

Three Family Care auto programs
1.Women's Massage
2.Men's Massage
3.Senior Massage

NAME AND FUNCTION OF EACH COMPONENT



Three Leisure Time auto programs
1.Game Mode
2.Movie Mode
3.Nap Mode

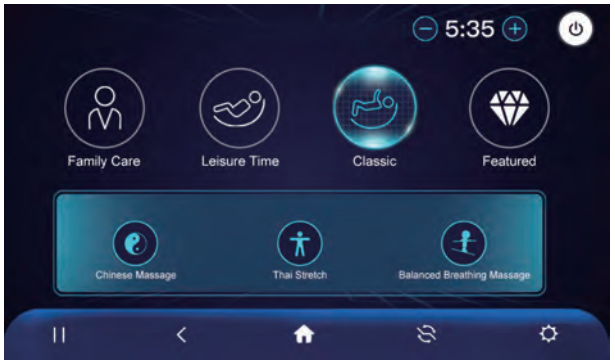

Three Classic auto programs
1.Chinese Massage
2.Thai Stretch
3.Balanced Breathing Massage

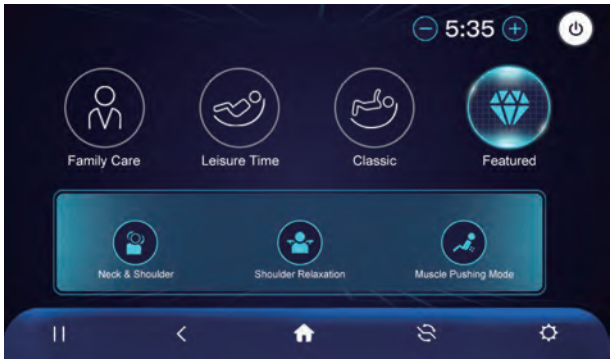

Three Featured auto programs
1.Neck & Shoulder
2.Shoulder Relexation
3.Muscle Pushing

PRELIMINARY CHECKS

Unpacking Massage Chair Cartons

▶ Unpack the carton and take all massage chair units out of the carton.

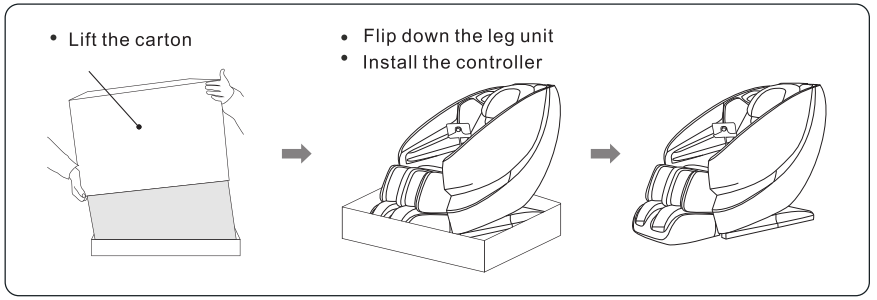

▶ Remove secure straps and lift the carton vertically, flip down the leg unit.
▶ Take out the user manual, power cable and controller.
▶ Plug the power cord into the chair and connect to the power outlet, turn on the main power switch, you are set to go.(See the picture below)

Flip down the leg unit

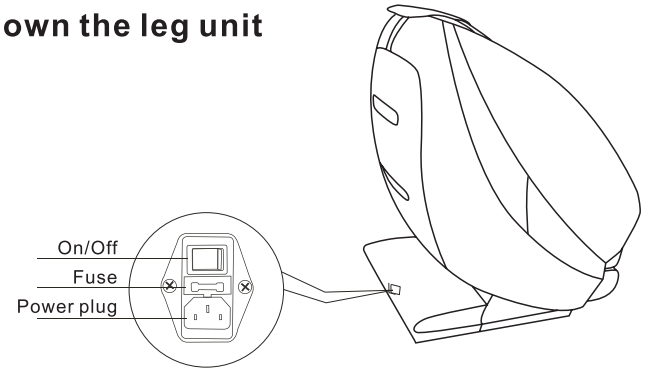

CAUTION

▶ Do not disassemble this product by yourself to avoid product failure.
▶ Make sure no water or other liquid enters into the controller to avoid fault.
▶ Do not pinch or squeeze the controller or power cord.

FUNCTIONS AND FEATURES

1. Zero Gravity Function
It will slide forward and recline afterwards, glider recliner linkage mechanism to save space and provide utmost relaxing.

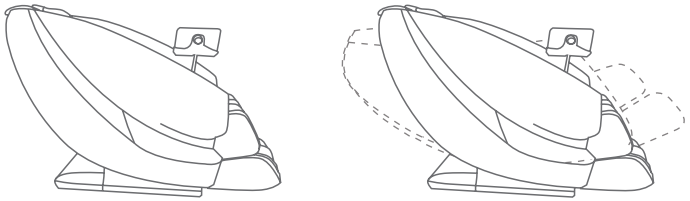

2. Mobile Neck Twisting Mechanism
Ensures accurate massage of the neck, shoulders, and lower back. Radial massage reaches deep muscles and acupoints, quickly relieving soreness.

3. Extendable Legrest
Leg airbags inflate to press and massage the legs. The length of the calf can adapt to people of different heights, with a stretching length of up to 16 cm.

4. Air Pressure Massage
The product has multiple airbag massage functions in different areas, providing full-body airbag massage (shoulders, arms, calves, and feet).

5. Sole/Hip Roller Massage
Underfoot massage unit provides hand simulation rolling and shiatsu massage for the foot reflex zone.

6. Manual Massage Programs
This product is designed with various massage techniques: kneading, twisting, rubbing, and shiatsu for custom-tailored relaxation.

7. Simple and Easy-to-Use Controller
Simple and easy-to-use controller provide easy access to all functions.

8. Voice Control
You can turn on/off the massage chair, start/switch auto or manual programs by speaking the command, which frees your hands and allows a head-to-toe rest.

NAME AND FUNCTION OF EACH COMPONENT

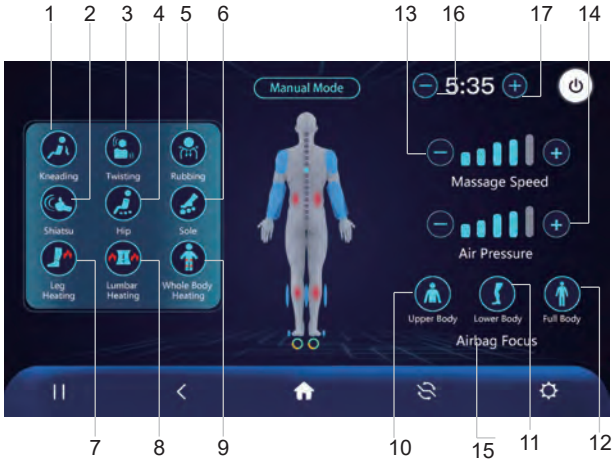

1.Kneading
2.Shiatsu
3.Twisting
4.Hip
5.Rubbing
6.Sole
7.Leg Heating
8.Lumbar Heating
9.Whole BodyHeating
10.Upper Body
11.Lower Body
12.Full Body
13.Massage Speed
14.Air Pressure
15.Airbag Focus
16. Massage time decrease
17.Massage time increase



Chair angle adjustment page



Settings Page
1.Language choose:English
2.Massage time:10Min,15Min,20Min, 25Min,30 Min
3.Screen off time:10Min,15Min, 20Min, 25Min, Never
4.Voice Control: ON/OFF
5.Voice Guide: ON/OFF
6.Heating: ON/OFF
7.Bluetooth: ON/OFF

VOICE FUNCTION

Voice Control

English Voice Control function can be activated by saying “Switch to voice mode” to microphone.
After chair replies, saying the other commands to the chair will activate related funtion.

Voice Command	Reply
Switch to voice mode	I'm listening
Turn Off	Power Off
Women's Massage	Women's Massage Mode activated.
Men's Massage	Men's Massage Mode activated.
Senior Massage	Senior Massage Mode activated.
Office Care	Office Care Mode activated.
Recovery	Recovery Mode activated.
Nap Mode	Nap Mode Mode activated.
Chinese Massage	Chinese Massage Mode activated.
Thai Stretch	Thai Stretch Mode activated.
Ultimate Relaxation	Ultimate Relaxation Mode activated.
Neck & Shoulder	Neck & Shoulder Massage Mode activated.
Shoulder Relaxation	Shoulder Relaxation Mode activated.
Deep Tissue	Deep Tissue Mode activated.
Rocking	Rocking mode on. Rocking mode off.
Zero Gravity	Zero Gravity Postion one activated, Zero Gravity Postion two activated, Exiting zero gravity.
Heating	Back Heating on, Leg Heating on, Full-body heating on. Full-body Heating off.
Kneading Mode	Kneading Massage Mode activated.
Rubbing Mode	Rubbing Massage Mode activated.
Twisting Mode	Twisting Massage Mode activated.
Shiatsu Mode	Shiatsu Massage Mode activated.
Mechanism Up	Mechanism moving up.
Mechanism Down	Mechanism moving down.
Back Up	Reclining up.
Back Down	Reclining down.
Airbag Focus	Upper body air pressure activated. Lower body air pressure activated. Full-body air pressure activated. Air pressure off.
Pause	Pause
Resume the massage	Continue

VOICE FUNCTION

Voice Guide

▶ There is voice guide prompted with each operation of massage chair

▶ Voice Guide:

Voice Guide	
Power on	Sole massage level two
Power off	Sole massage level three
Women's Massage Mode activated.	Sole massage off
Men's Massage Mode activated.	Hip massage on
Senior's Joy Massage Mode activated.	Hip massage off
Game Mode activated.	Massage speed set to level one.
Movie Mode activated.	Massage speed set to level two.
Nap Mode activated.	Massage speed set to level three.
Chinese Massage Mode activated.	Massage speed set to level four.
Thai Stretch Massage Mode activated.	Massage speed set to level five.
Balanced Breathing Massage Mode activated.	Air pressure level one
Rocking mode on.	Air pressure level two
Rocking mode off.	Air pressure level three
Leg heating on	Air pressure level four
Back heating on	Air pressure level five
Full-body heating on.	Kneading Massage Mode activated.
Full-body heating off.	Rubbing Massage Mode activated.
Upper body air pressure activated.	Twisting Massage Mode activated.
Lower body air pressure activated.	Shiatsu Massage Mode activated.
Full-body air pressure activated.	Mechanism moving up.
Air pressure off	Mechanism moving down.
Pause	Bluetooth turned on.
Continue	Bluetooth turned off.
Neck & Shoulder Massage Mode activated.	Voice control off
Shoulder Relaxation Mode activated.	Voice control on
Muscle Pushing Mode activated.	Voice guide off
Reclining up.	Voice guide on
Reclining down.	Session set to 20 minutes.
Zero gravity position one activated.	Session set to 25 minutes.
Zero gravity position two activated.	Session set to 30 minutes.
Exiting zero gravity.	Session set to 10 minutes.
Sole massage level one	Session set to 15 minutes.